SHARP SERVICE MANUAL

CODE : 00ZAR5015/A1E

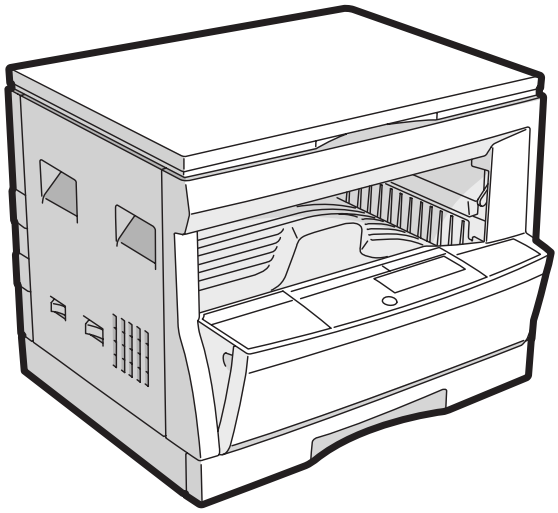

DIGITAL COPIER

MODEL AR-5015

CONTENTS

[1] GENERAL ..... Refer to AR-163
[2] SPECIFICATIONS AR-5015
[3] CONSUMABLE PARTS AR-5015
[4] EXTERNAL VIEWS AND INTERNAL STRUCTURES AR-5015
[5] UNPACKING AND INSTALLATION ..... Refer to AR-163
[6] ADJUSTMENTS ..... Refer to AR-163
[7] SIMULATIONS AR-5015
[8] USER PROGRAMS ..... Refer to AR-163
[9] TROUBLE CODE LIST ..... Refer to AR-163
[10] MAINTENANCE AR-5015
[11] DISASSEMBLY AND ASSEMBLY AR-5015
[12] FLASH ROM VERSION UP PROCEDURE ..... Refer to AR-163
[13] ELECTRICAL SECTION AR-5015
PARTS GUIDE

Parts marked with "⚠" are important for maintaining the safety of the set. Be sure to replace these parts with specified ones for maintaining the safety and performance of the set.

SHARP CORPORATION

This document has been published to be used for after sales service only.
The contents are subject to change without notice.

Note for this Service Manual

This Service Manual describes only the items related to the AR-5015. For the other items common with the AR-163, please refer to the AR-162/163 Service Manual (Document code: 00ZAR162//A1E). The table below shows which document(s) should be referred to for each section. (Refer to the document marked with ○.)

Section	AR-163	AR-5015	Changed item
[1] NOTE FOR SERVICING	○		
[2] SPECIFICATIONS	○	○	Some specifications and option setup
[3] COSUMABLE PARTS		○	
[4] EXTERNAL VIEW AND INTERNAL STRUCTURE	○	○	Operation panel
[5] UNPACKING AND INSTALLATION	○		
[6] ADJUSTMENTS	○		The AR-5015 does not support installation of an option unit. (Note 1)
[7] SIMULATION	○	○	The AR-5015 does not support installation of an option unit. (Note 1)
[8] USER PROGRAM	○		The AR-5015 does not support installation of an option unit. (Note 1)
[9] TROUBLE CODE LIST	○		The AR-5015 does not support installation of an option unit. (Note 1)
[10] MAINTENANCE	○	○	The AR-5015 does not support installation of an option unit. (Note 1)
[11] DISASSEMBLLY AND ASSEMBLY	○	○	
[12] FLASH ROM VERSION UP PROCEDURE	○		
[13] ELECTRICAL CIRCUIT	○	○	The AR-5015 does not support installation of an option unit. (Note 1)

Note 1: The AR-5015 does not support installation of an option unit such as SPF, paper feed unit, job separator, electronic sort unit, printer expansion unit, and FAX expansion unit. Therefore, the descriptions on option units in each section of the reference document (AR-162/163 S/M) should be disregarded.

[2] SPECIFICATIONS

The table below shows the specifications of this model and the contents of changes from the AR-163.

Item		AR-163	AR-5015
Copy speed		16 PPM	15 PPM
Multi-purpose tray		100 sheets	100 sheets
Standard tray		1 cassette (250 sheets)	1 cassette (250 sheets)
SOPM		Yes (Depends on the destination)	No
Option tray	1 tray	Option	No
	2 tray	Option	No
Original detection		No	No
Original cover		Yes	Yes
SPF		Option	No
Electronic sort		Option	No
Job separator		Option	No
FAX expansion unit		Option	No
Printer expansion unit		Option	No
FAX expansion memory		Option	No
LCD panel		Option	No
Dust cover		No	No
APS		Yes	No

[3] CONSUMABLE PARTS

1. SUPPLY SYSTEM TABLE

A. Latin America

NO	Name	Content	Life	Model name	Remark
1	Toner cartridge (Black) <With IC>	Toner ×10 (Toner: Net Weight 475g) Bag ×10	180K	AR-015LT	Life setting by A4 (8.5"x11") 6% coverage
2	Developer	Developer ×10 (Developer: Net Weight 400g)	500K	AR-015CD	
3	Drum kit	Drum ×1 Drum fixing plate ×1	50k	AR-015DR	

∗ For USA goverrnment

B. Middle East/Africa

NO	Name	Content	Life	Model name	Remark
1	Toner cartridge (Black) <With IC>	Toner ×10 (Toner: Net Weight 475g) Bag ×10	180K	AR-015ET	Life setting by A4 6% coverage
2	Developer	Developer ×10 (Developer: Net Weight 400g)	500K	AR-015CD	
3	Drum kit	Drum ×1 Drum fixing plate ×1	50k	AR-015DR	

C. Europe

NO	Name	Content	Life	Model name	Remark
1	Toner cartridge (Black) <With IC>	Toner ×10 (Toner: Net Weight 475g) Bag ×10	180K	AR-015LT	Life setting by A4 (8.5"x11") 6% coverage
2	Developer	Developer ×10 (Developer: Net Weight 400g)	500K	AR-015CD	
3	Drum kit	Drum ×1 Drum fixing plate ×1	50k	AR-015DR	

D. Asia

NO	Name	Content	Life	Model name	Remark
1	Toner cartridge (Black) <With IC>	Toner ×10 (Toner: Net Weight 475g) Bag ×10	180K	AR-015CT	Life setting by A4 6% coverage
2	Developer	Developer ×10 (Developer: Net Weight 400g)	500K	AR-015CD	
3	Drum kit	Drum ×1 Drum fixing plate ×1	50k	AR-015DR	

[4] EXTERNAL VIEWS AND INTERNAL STRUCTURES

3. OPERATION SECTION

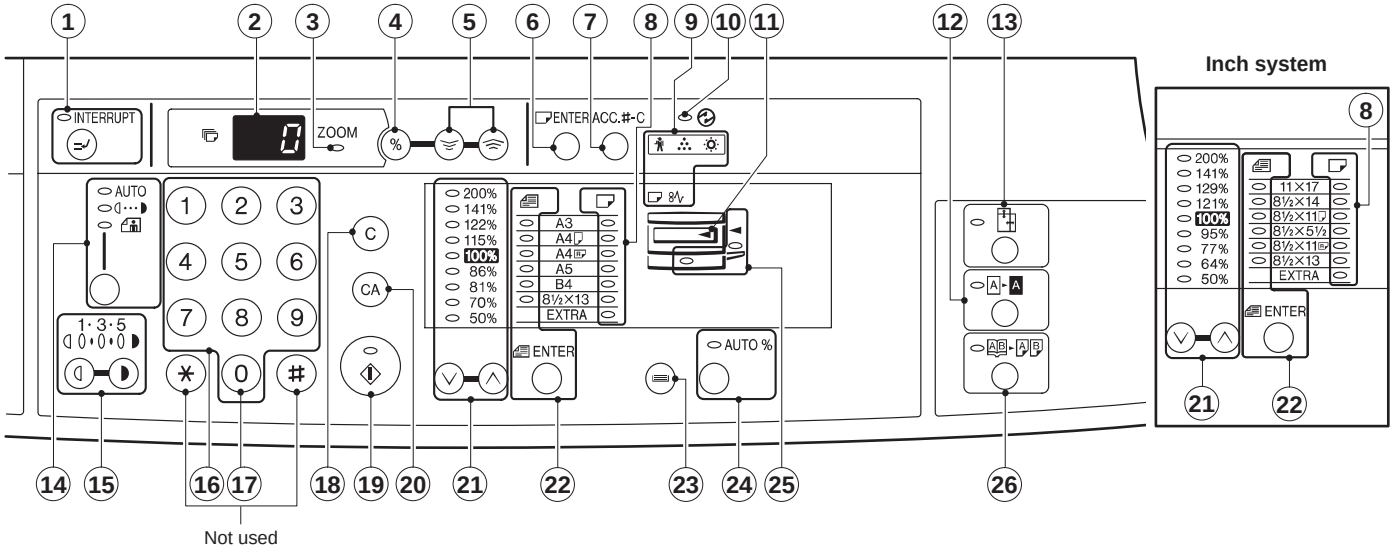

1	INTERRUPT key and indicator	2	Copy quantity display	3	ZOOM indicator
4	Copy ratio display key	5	Zoom keys	6	PAPER SIZE ENTER key
7	AUDIT CLEAR key	8	PAPER SIZE indicators	9	Alarm indicators
10	POWER SAVE indicator	11	Output tray full indicator	12	B/W REVERSE key and indicator
13	XY-ZOOM key and indicator	14	AUTO/MANUAL/PHOTO key and indicators	15	Light and dark keys and indicators
16	Numeric keys	17	Zero key	18	CLEAR key
19	START key and indicator	20	CLEAR ALL key	21	PRESET RATIO selector keys and indicators
22	ORIGINAL SIZE ENTER key and indicators	23	TRAY SELECT key	24	AUTO IMAGE key and indicator
25	Paper feed location/misfeed location indicators	26	DUAL PAGE COPY key and indicator		

[7] SIMULATIONS

The table below shows the changed points in simulations. (Items marked with* are changed.)

Main code	Sub code	Contents	Details of operation	Initial value	Set range
21	1	Maintenance cycle setting	Used to display the currently set maintenance cycle at the numbers shown at right. When the set value is entered and the start key is pressed, the set value is stored. Key operation/Display 0: 2500 sheets — 4: 150000 sheets 1: 5000 sheets — 5: FREE (999999 sheets) 2: 25000 sheets* — 6: 10000 sheets 3: 50000 sheets* — 7: 7500 sheets	2*	0~7*
21	2	Mini maintenance cycle setting	Used to display the currently set mini maintenance cycle at the numbers shown at right. When the set value is entered and the start key is pressed, the set value is stored. Key operation/Display 0: 2500 sheets — 4: 50000 sheets 1: 5000 sheets 2: 10000 sheets 3: FREE (999999 sheets)	4	0~4*
26	6	Destination setting	Used to display the current destination setting with the numbers at right. After entering the set value, press the start key, and the set value is stored. Key operation/Display 0: Japan — 8: EX AB series 1: USA (Inch series) — 9: EX inch series (FC conformity) 2: Canada (Inch series) — 10: EX AB series (FC conformity) (Australia, Newzealand) 3: Germany 1 (AB series) 4: UK (AB series) — 11: China (AB series) 5: Not used — 12: Taiwan (AB series) 6: France (AB series) — 13: Germany 2 (AB series) 7: EX inch series	7	0~13
26	10	Model name input*	Used to display and register the model name. Key operation/Display 0: ARS140 — 1: AR5015	1	0~1
30	1	Machine sensor operation check	Used to check the sensor in the machine transport system with LED on the operation panel. Display <Lighting at sensor ON> Paper entry sensor : Machine position JAM LED Duplex sensor : Manual feed tray position LED Paper exit sensor : JAM LED		

[10] MAINTENANCE

1. MAINTENANCE TABLE

×: Check (Clean, adjust, or replace when required.) ○: Clean ▲: Replace △: Adjust ☆: Lubricate

Unit name	Part name		When calling	25K	50K	75K	100K	125K	150K
Drum peripheral	OPC drum		–	–	▲	–	▲	–	▲
	Cleaning blade		–	–	▲	–	▲	–	▲
	Side seal		×	×	×	×	×	×	▲
	MC unit		×	○	▲	○	▲	○	▲
	(MC charging electrode)		–	(○)	(▲)	(○)	(▲)	(○)	(▲)
	(MC grid)		–	(○)	(▲)	(○)	(▲)	(○)	(▲)
	(MC case)		–	(○)	(▲)	(○)	(▲)	(○)	(▲)
	Transfer wire		○	○	×	○	×	○	▲
	Transfer paper guide		○	○	×	○	×	○	▲
Developing section	Developer		–	–	▲	–	▲	–	▲
	DV seal		–	×	×	×	×	×	▲
	DV side seal		–	○	–	○	–	○	▲
	Side Mylar		–	–	–	–	–	–	▲
Optical section	Lamp unit	Reflector	○	×	○	×	○	×	○
		Mirror	○	×	○	×	○	×	○
	No. 2/3 mirror unit	Mirror	○	×	○	×	○	×	○
		Pulley	×	×	×	×	×	×	×
	CCD peripheral	Lens	○	×	○	×	○	×	○
	Glass	Table glass	○	×	○	×	○	×	○
		White Plate	○	×	○	×	○	×	○
	Other	Drive wire	×	×	×	×	×	×	×
		Rail	×☆	×	×☆	×	×☆	×	×☆
		Document cover	○	×	○	×	○	×	○
		Document size sensor	○	×	○	×	○	×	○
LSU		Dust-proof glass	○	×	○	×	○	×	○
Paper feed section	Multi paper feed section	Takeup roller	○	×	○	×	○	×	○
		Paper feed roller	○	×	○	×	○	×	○
		Spring clutch	○☆	×	○☆	×	○☆	×	○☆
Paper transport section		PS roller	○	×	○	×	○	×	○
		Transport (paper exit) rollers	○	×	○	×	○	×	○
		Spring clutch	○☆	×	○☆	×	○☆	×	○☆
Fusing section		Upper heat roller	○	×	○	×	○	×	▲
		Pressure roller	○	×	○	×	○	×	○
		Pressure roller bearing	×	×	×	×	×	×	○☆
		Upper separation pawl	×	×	×	×	×	×	○
		Lower separation pawl	×	×	×	×	×	×	○
Drive section		Gears	×☆	×	×☆	×	×☆	×	×☆
		Belts	×	×	×	×	×	×	○
Paper exit section		Ozone filter	×	×	×	×	×	×	×*1

*1 : Recommendable replacement time: 50K (Letter, 5% print)

2. MAINTENANCE DISPLAY SYSTEM

According to the change in toner and developer life, the LED ON timing is changed.

Toner	Life	18K	
	Remaining quantity check ∗1	a. Press and hold the density adjustment LIGHT key for more than 5 sec, and the machine will enter the user program mode. b. Press and hold the "%"key for more than 5 sec, and the remaining quantity will be displayed on the copy quantity display in one of the following levels: (Remaining quantity display levels: 100%, 75%, 50%, 25%, 10%, LO) c. Press the density adjustment LIGHT key to cancel.	
	Remaining quantity	NEAR EMPTY About 10%	EMPTY
	LED	ON	Flash
	Machine	Operation allowed	Stop
Developer	Life	50K	
	LED	ON at 50K of the developer count.	
	Machine	Selection is available between Not Stop and Stop by Service Simulation (SIM 26-37) Setup. (If Stop is selected, the LED will flash and stop at 50K) ∗ Default: Not Stop ∗ Clear: SIM 42-1	
Maintenance	LED	Selection is available among 50K, 25K, 10K, 7.5K, 5K, and free (no lighting) with SIM 21-1. ∗ Default: 25K ∗ Clear: SIM 20-1	
	Machine	Not stop.	

∗ 1 : Installation of a new toner cartridge allows to display the remaining quantity.

[11] DISASSEMBLY AND ASSEMBLY

11. DEVELOPING SECTION

A. Developing box

a) Side mylar attachment reference

The side mylar attachment reference is shonw in the figure below.

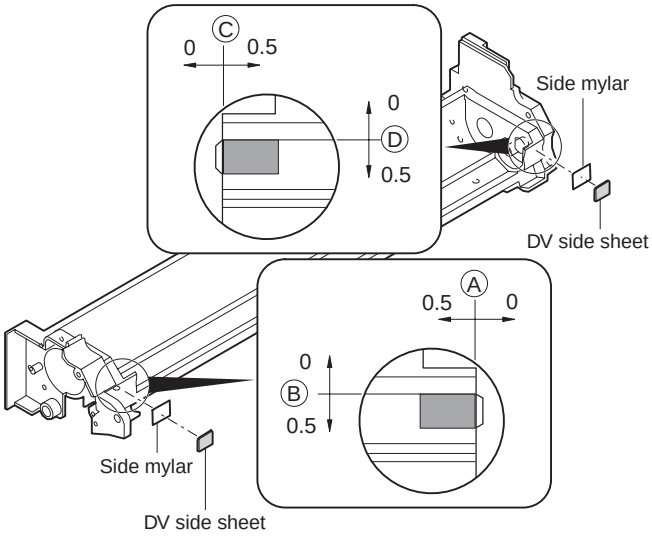

12. PROCESS SECTION

B. Charger cleaning

1. Remove the MC holder unit

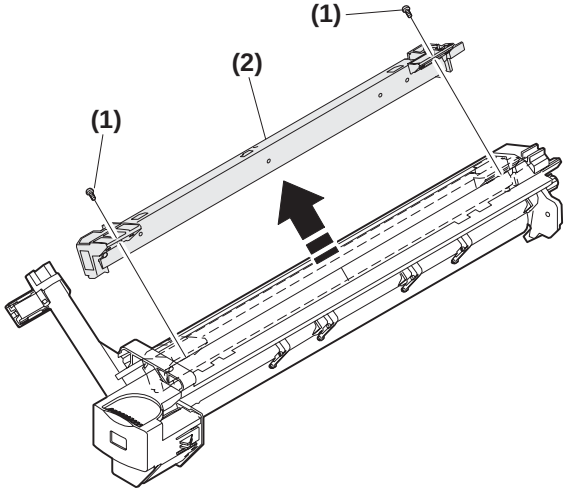

2. Remove the Screen grid

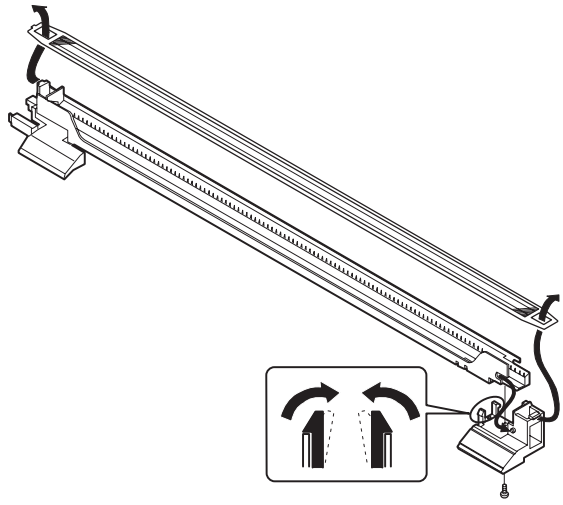

3. Push the electrode cleaner onto the electrode tip so that the electrode tip comes into the electrode cleaner to clean. (repeat two or three times.)

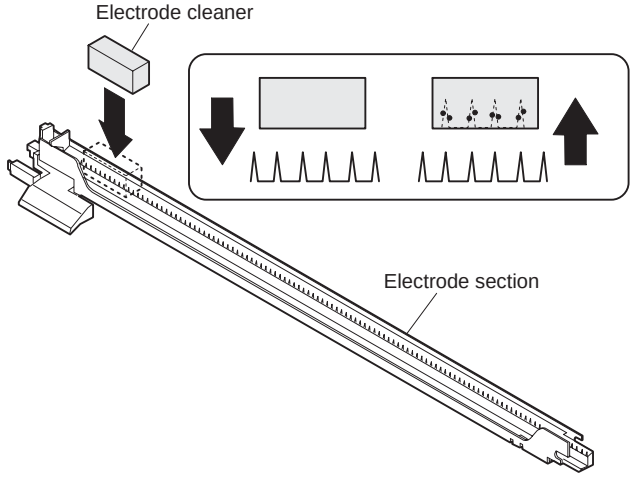

Note: Do not move the electrode cleaner with the electrode tip in it. When cleaning, clean all the electrodes evenly.

D. Moquette F/R of process frame unit

To improve reliability of the drum unit, the AR-5015 must use the following parts.

- Process frame unit : CFRM-0021QS67
- Moquette F : PSEL-0129QSZZ
- Moquette R : PSEL-0130QSZZ

[13] ELECTRICAL SECTION

1. BLOCK DIAGRAM

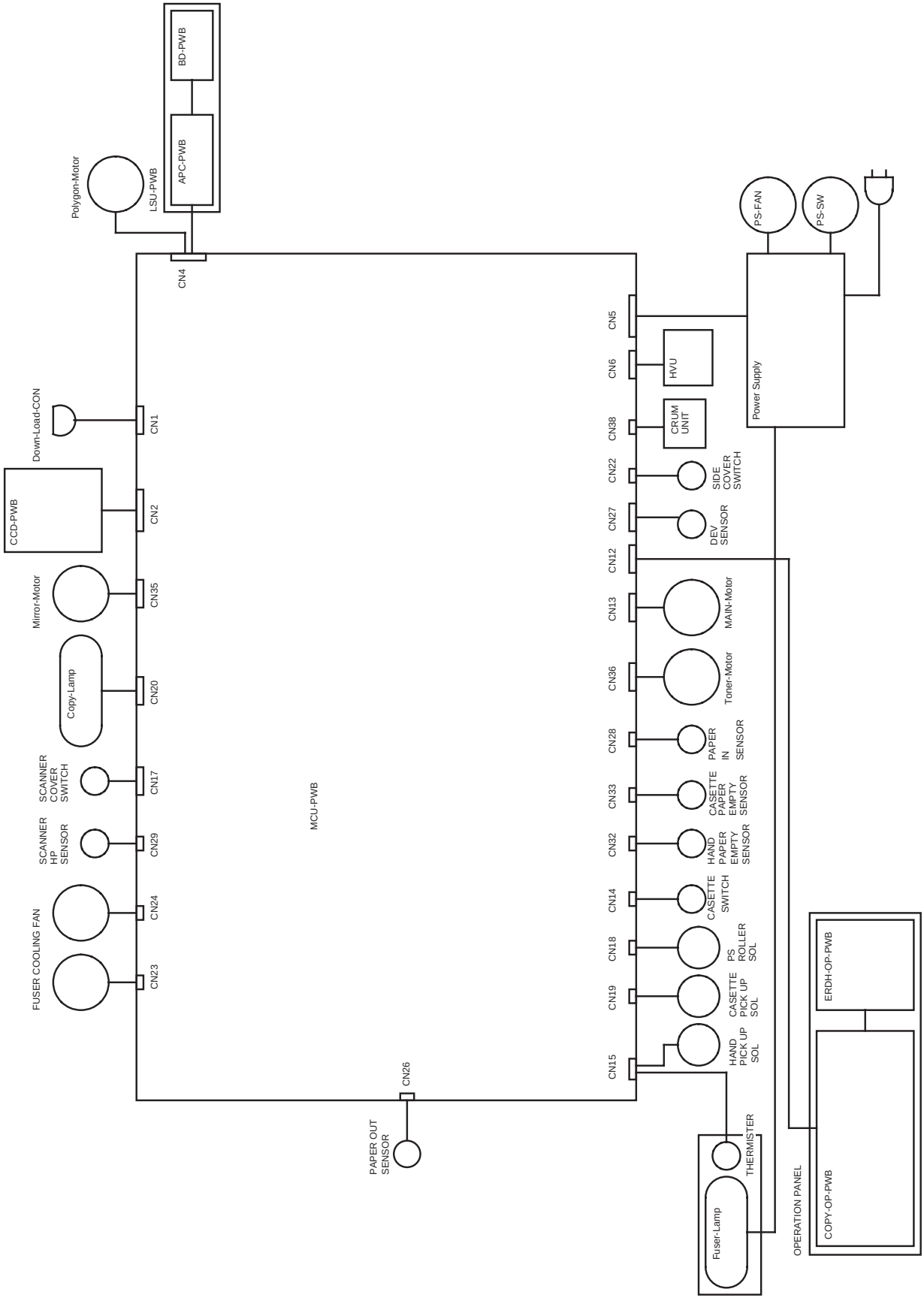

2. ACTUAL WIRING DIAGRAM

ACTUAL WIRING DIAGRAM 1/2

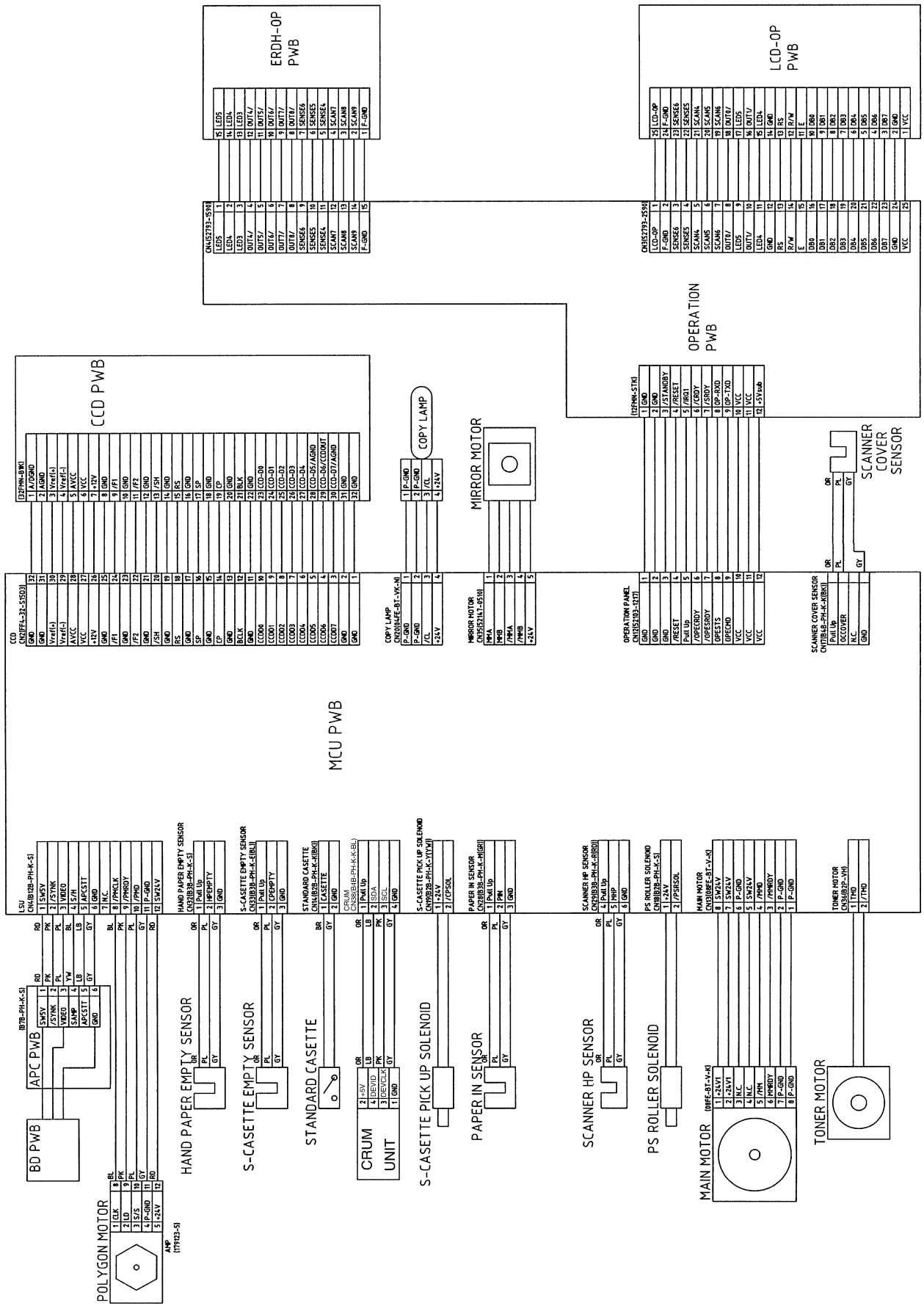

ACTUAL WIRING DIAGRAM 2/2

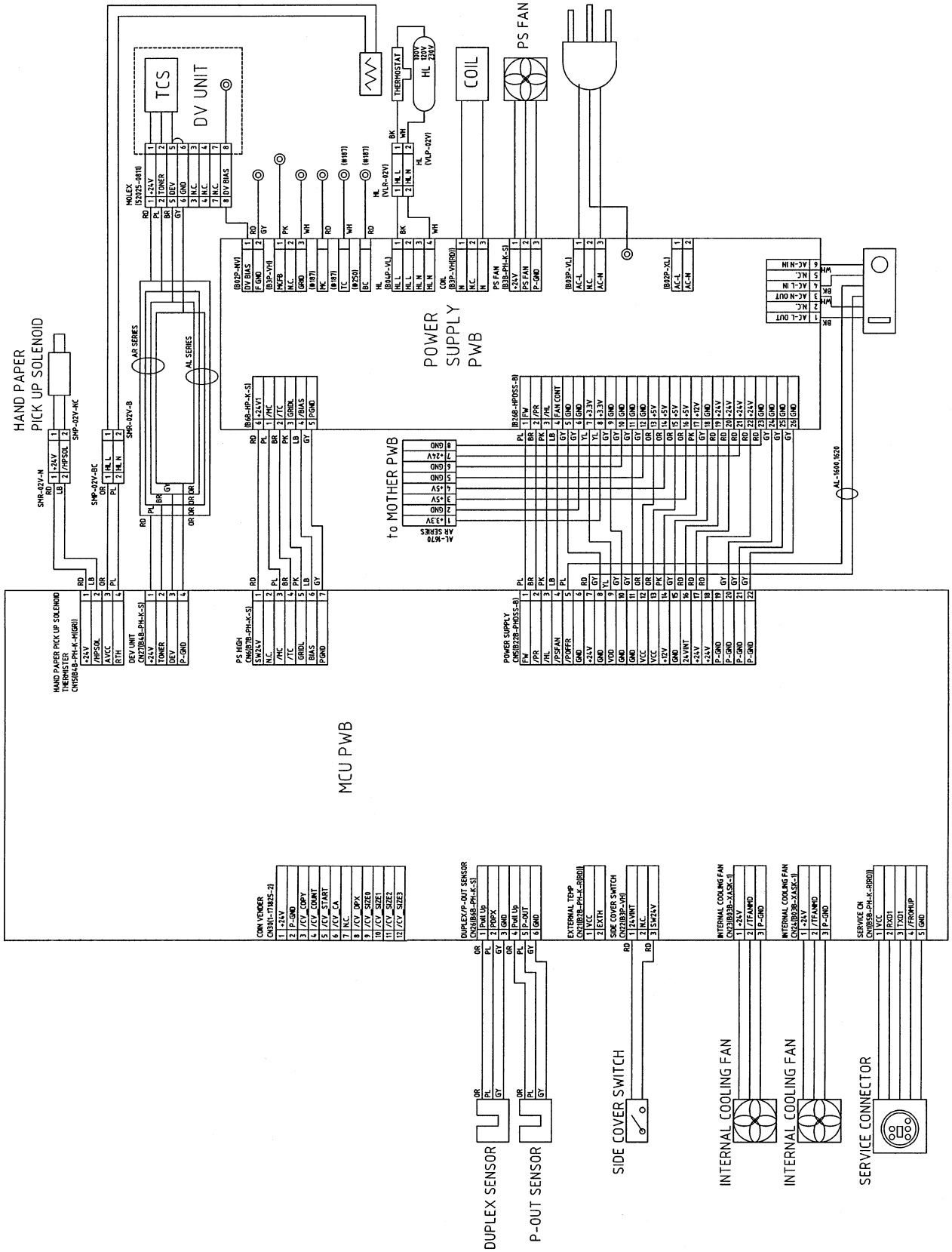

SHARP

PARTS GUIDE

MODEL AR-5015

CONTENTS

1 Exteriors
2 Operation panel section
3 Side door unit
4 2nd,3rd mirror unit
5 Optical unit
6 Middle frame unit
7 Process unit
8 DV cartridge unit
9 Fusing unit
11 Base plate unit 1
12 Base plate unit 2
13 Manual paper feeding multi unit
14 Delivery frame unit
16 250 sheets tray unit
17 Packing material & Accessories
20 MCU PWB
33 ERDH OP PWB
■ Index

The AR-5015 Parts Guide describes only changed from AR-163 Parts Guide.
For the common parts, please refer to the AR-163 Parts Guide (Code: 00ZAR162//P1/)

MODEL	REFER MODEL
AR-5015	AR-163

補修部品のランク付

市場における補修部品の在庫管理が、適正に運営出来る手助けとなることを、目的とします。

Ａランク ： 取替頻度が比較的多く、在庫を必要とするパーツ。

Ｂランク ： 取替頻度は比較的少ないが、在庫を必要とするパーツ。

Ｃランク ： 取替頻度はほとんどないと思われるパーツ。

Ｄランク ： 取替頻度はほとんどないが新品再生に必要なパーツ。

Ｅランク ： ユニットパーツ。サービス効率アップの為、在庫する事を推奨するパーツ。

Ｓランク ： 消耗品

但し、複写機のパーツについては、同一パーツ名であっても、下記パーツは、使用箇所の相違により、Ａ・Ｂランク分けします。

パーツ名 ： 金属製のギャー、スプロケット、ベアリング、ゴム製のベルト、スプリングクラッチ機構

Ａランク ： 常に回転しているか、付加がかかっている箇所に使用され、回転回数が増える事により、変形又は磨耗が生じその性能が発揮できなくなるパーツ。

Ｂランク ： 回転部分に使用されているが、磨耗度が比較的少ないパーツ。

DEFINITION

The definition of each Rank is as follows and also noted in the list

A : Parts necessary to be stocked as High usage parts.

B : Parts necessary to be stocked as Standard usage parts.

C : Low usage parts.

D : Parts necessary for refurbish.

E : Unit parts recommended to be stocked for efficient after sales service.
Please note that the lead time for the said parts may be longer than normal parts.

S : Consumable parts.

Please note that the following parts used in Copier under the same description are classified into A or B Rank depending upon the place used.

Example : Gear made of Metal, Sprocket, Bearing, Belt made of Rubber, Spring clutch mechanism.

A Rank : The parts which may be with the revolution or loading.

B Rank : Parts similar to A Rank parts, but are not included in Rank A.

安全性・信頼性確保のため部品は、必ず正規のものをご使用下さい。
⚠印の商品は、安全上重要な部品です。交換をする時は、安全および性能維持のため必ず指定の部品をご使用下さい。

Because parts marked with "⚠" is indispensable for the machine safety maintenance and operation, it must be replaced with the parts specific to the product specification.

○ 当モデルのサービス資料には、この資料以外にサービスマニュアル（回路図含む）があります。合わせて御利用下さい。

○ Other than this Parts Guide, please refer to documents Service Manual (including Circuit Diagram) of this model.

○ Please use the 13 digit code described in the right hand corner of front cover of the document, when you place an order.

○ For U.S. only-Use order codes provided in advertising literature. Do not order from parts department.

1 外装 (Exteriors)

NO.	PARTS CODE	PRICE RANK Ex.	PRICE RANK Ja.	NEW MARK	PART RANK	DESCRIPTION	
1	GCOVH0010QSZ3	BC	GJ	N	D	OC cover	OCｶﾊﾞｰ
2	PSHEZ0058QSZ1	AU	FG	N	D	OC sheet	OCﾏｯﾄ
10	CCAB-0012QS0V	BA	FX	N	D	Front exterior	(Japan) 前ｷｬﾋﾞﾈｯﾄ
	CCAB-0012QS0W	BA	FX	N	D	Front exterior	(Except Japan) 前ｷｬﾋﾞﾈｯﾄ
11	GFTA-0001QSZ1	AT	EZ		D	Front cabinet cover	前ｷｬﾋﾞ蓋
49	TLABZ0058QSZZ	AD	DJ		C	Class 1 label	(200V Series) ｸﾗｽ1ﾗﾍﾞﾙ
501	CCOVH0010QS51	BM	HV		E	OC cover unit	OCｶﾊﾞｰﾕﾆｯﾄ

2 操作部 (Operation panel section)

NO.	PARTS CODE	PRICE RANK Ex.	PRICE RANK Ja.	NEW MARK	PART RANK	DESCRIPTION	
3	HPNLH0021QSZZ	AT	EZ	N	D	ZEB Main Deco.panel	(Japan) ZEBﾒｲﾝﾃﾞｺﾊﾟﾈﾙ
	HPNLH0021QSZ2	AT	EZ	N	D	ZEB Main Deco.panel	(LAG2,LAG4) ZEBﾒｲﾝﾃﾞｺﾊﾟﾈﾙ
	HPNLH0021QSZ3	AT	EZ	N	D	ZEB Main Deco.panel	(Philippines) ZEBﾒｲﾝﾃﾞｺﾊﾟﾈﾙ
	HPNLH0021QSZ4	AT	EZ	N	D	ZEB Main Deco.panel	(Europe) ZEBﾒｲﾝﾃﾞｺﾊﾟﾈﾙ
	HPNLH0021QSZ1	AT	EZ	N	D	ZEB Main Deco.panel	(Other countries) ZEBﾒｲﾝﾃﾞｺﾊﾟﾈﾙ
4	HPNLH0022QSZZ	AK	EB	N	D	ZEB Special Deco.panel	(Japan) ZEB 特殊ﾃﾞｺﾊﾟﾈﾙ
	HPNLH0022QSZ1	AK	EB	N	D	ZEB Special Deco.panel	(Except Japan) ZEB 特殊ﾃﾞｺﾊﾟﾈﾙ
6	JBTN-0018QSZZ	AE	DJ		C	Function key	部門ｷｰ
7	JBTN-0029QSZZ	AE	DS		C	Select key	選択ｷｰ
13	JBTN-0026QSZZ	AE	DJ		C	Interrupt key	割込みｷｰ
14	JBTN-0030QSZZ	AD	DJ		C	Mode select key	画質ｷｰ
15	JBTN-0027QSZZ	AD	DJ		C	Density select key	濃度ｷｰ
17	CPWBF0025QSE3	AH	DX	N	E	ERDH operation PWB	ERDH 操作基板
19	CPWBF0024QSE1	BL	HL	N	E	COPY operation PWB	(Japan Other countries) COPY 操作基板
	CPWBF0024QSE2	BL	HL	N	E	COPY operation PWB	(LAG2,LAG4) COPY 操作基板
46	XEPSD30P08X00	AA	DD		C	Screw (3×8X)	ﾋﾞｽ

1 外装(Exteriors)

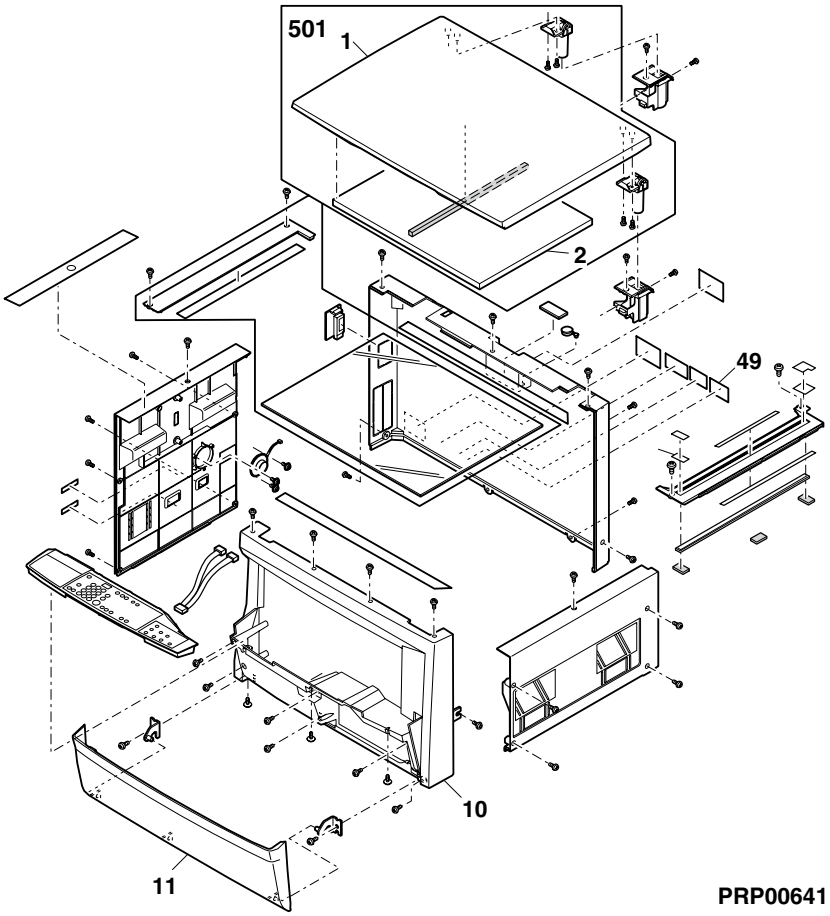

2 操作部(Operation panel section)

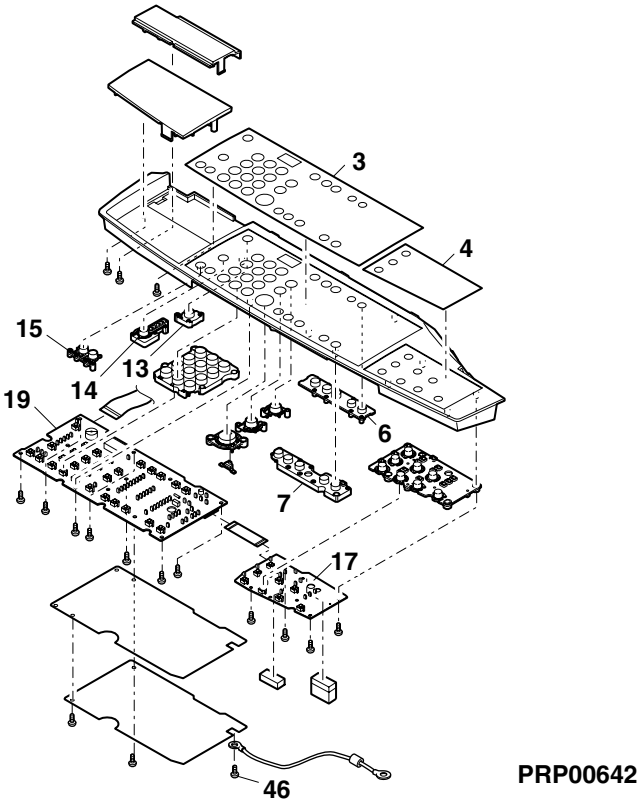

3 ｻｲﾄﾞﾄﾞｱｰﾕﾆｯﾄ(Side door unit)

NO.	PARTS CODE	PRICE RANK Ex.	PRICE RANK Ja.	NEW MARK	PART RANK	DESCRIPTION	
10	LFRM−0016QSZ2	AT	EZ		C	Right door inner N	右ﾄﾞｱｲﾝﾅｰN

3 ｻｲﾄﾞﾄﾞｱｰﾕﾆｯﾄ(Side door unit)

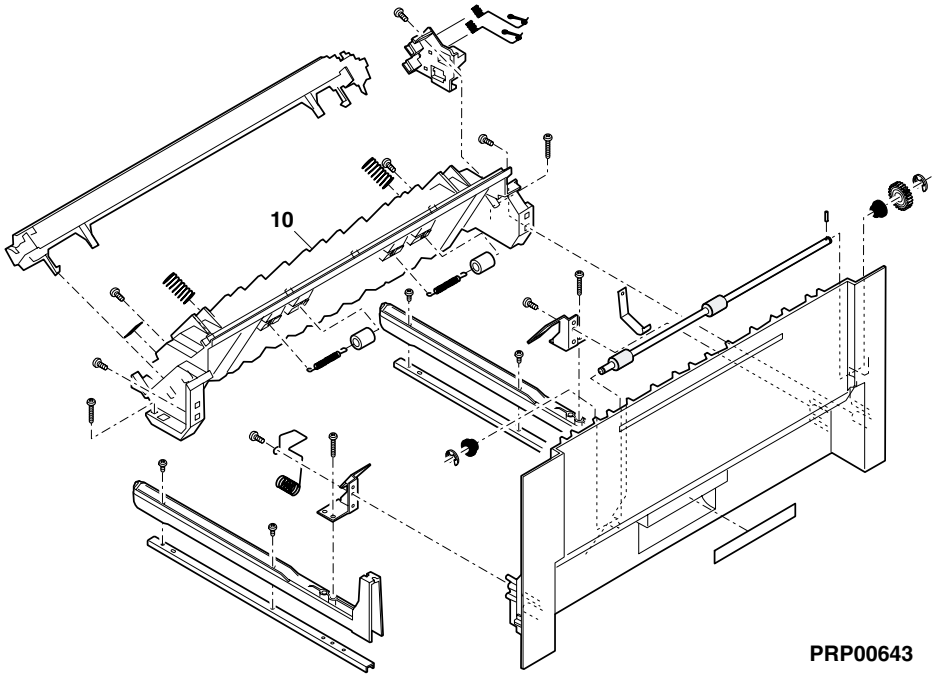

4 第2.3ﾐﾗｰﾕﾆｯﾄ(2nd,3rd mirror unit)

NO.	PARTS CODE	PRICE RANK Ex.	PRICE RANK Ja.	NEW MARK	PART RANK	DESCRIPTION	
4	NPLYZ0017QSZZ	AE	DS		C	W pulley	Wﾌﾟｰﾘｰ
9	CPLTM0156QS02	AH	DX		C	Pulley fixing plate R	ﾌﾟｰﾘｰ取付板 R
13	CPLTM0155QS02	AH	DX		C	Pulley fixing plate F	ﾌﾟｰﾘｰ取付板 F
	ﾕﾆｯﾄ (Unit)						
901	CMiR−0008QS32	BB	GD		E	2nd,3rd mirror unit	第2.3ﾐﾗｰﾕﾆｯﾄ

4 第2.3ﾐﾗｰﾕﾆｯﾄ(2nd,3rd mirror unit)

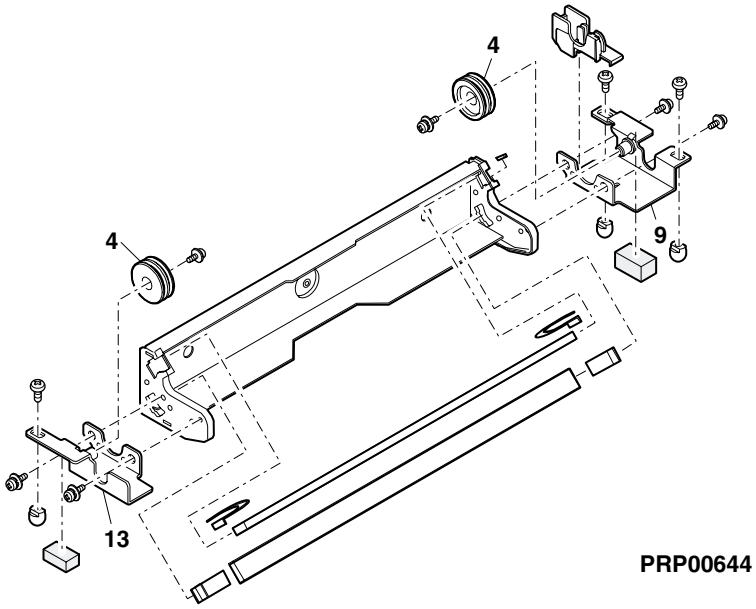

5 光学ﾕﾆｯﾄ(Optical unit)

NO.	PARTS CODE	PRICE RANK Ex.	PRICE RANK Ja.	NEW MARK	PART RANK	DESCRIPTION	
2	CMｉR－0008QS32	BB	GD		E	2nd,3rd mirror unit	第2.3ﾐﾗｰﾕﾆｯﾄ
8	CLNS－0003RS53	BR	LX		E	Lens unit	ﾚﾝｽﾞﾕﾆｯﾄ
18	NPLYZ0016QSZZ	AF	DS		C	Pulley	ﾃｲﾌﾟｰﾘｰ
81	DHAｉ－0200QSZZ	AS	EZ		C	CL harness	CLﾊｰﾈｽ
93	XEBSD30P06000	AA	DD		C	Screw (3×6)	ﾋﾞｽ
96	LPLTM4715FCZ1	AF	DS		C	Wire fixing plate F	ﾜｲﾔｰ取り付け板F
97	TCAUH0933FCZZ	AB	DD		C	55FE2 high temperature label	55FE2高温注意ﾗﾍﾞﾙ
⚠ 501	CREFL0004QS33	BL	HG		E	Copy lamp unit	ｺﾋﾟｰﾗﾝﾌﾟﾕﾆｯﾄ

5 光学ﾕﾆｯﾄ(Optical unit)

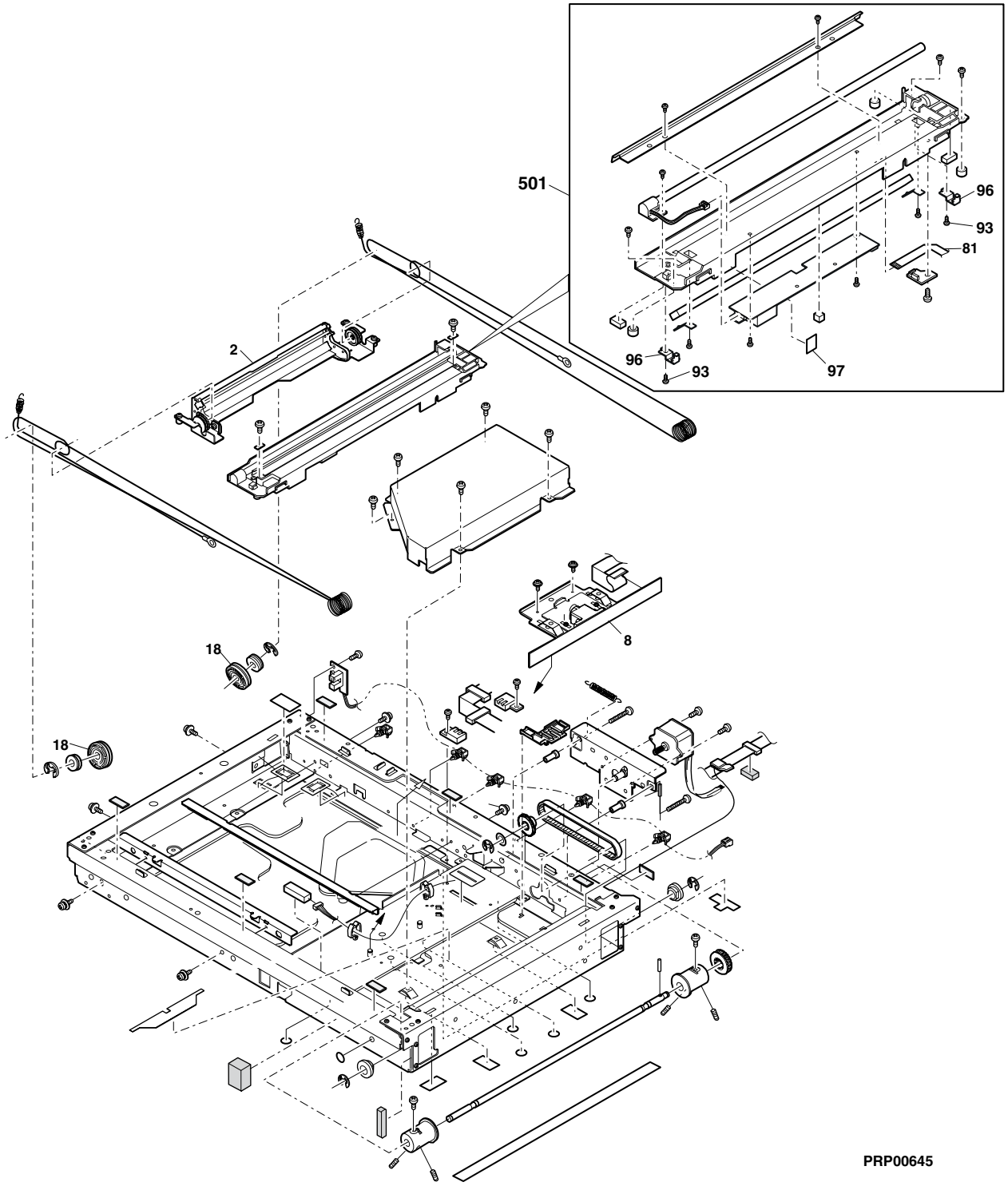

6 中間ﾌﾚｰﾑﾕﾆｯﾄ(Middle frame unit)

NO.	PARTS CODE	PRICE RANK Ex.	PRICE RANK Ja.	NEW MARK	PART RANK	DESCRIPTION	
7	DUNTK0041RS14	BG	GX		E	LSU unit	LSUﾕﾆｯﾄ
46	LFRM-0024QSZ3	BC	GJ		C	Middle frame	中間ﾌﾚｰﾑ
47	LPiNS0301FCZZ	AD	DJ		C	DV guide pin	DVｶﾞｲﾄﾞﾋﾟﾝ
51	LANGT0003QSZ1	AC	DJ		C	SRU fixing angle	SRU取付けｱﾝｸﾞﾙ

6 中間ﾌﾚｰﾑﾕﾆｯﾄ(Middle frame unit)

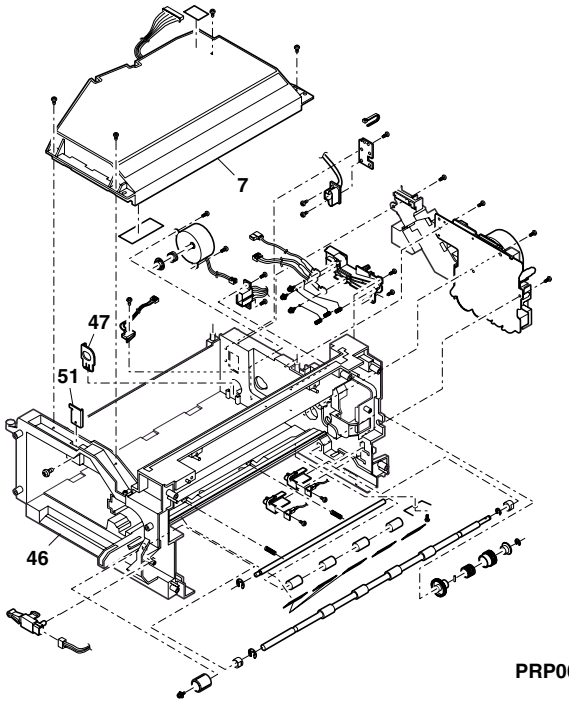

PRP00646

7 ﾌﾟﾛｾｽﾕﾆｯﾄ(Process unit)

NO.	PARTS CODE	PRICE RANK Ex.	PRICE RANK Ja.	NEW MARK	PART RANK	DESCRIPTION	
5	PSEL-0130QSZZ	AF	DS	N	C	Seal R PAN	(Except Japan) ﾓｹｯﾄ R PAN
6	PSEL-0129QSZZ	AF	DS	N	C	Seal F PAN	(Except Japan) ﾓｹｯﾄ F PAN
501	CFRM-0021QS67	BK	HG	N	E	Process frame unit	(Except Japan) ﾌﾟﾛｾｽﾌﾚｰﾑﾕﾆｯﾄ

7 ﾌﾟﾛｾｽﾕﾆｯﾄ(Process unit)

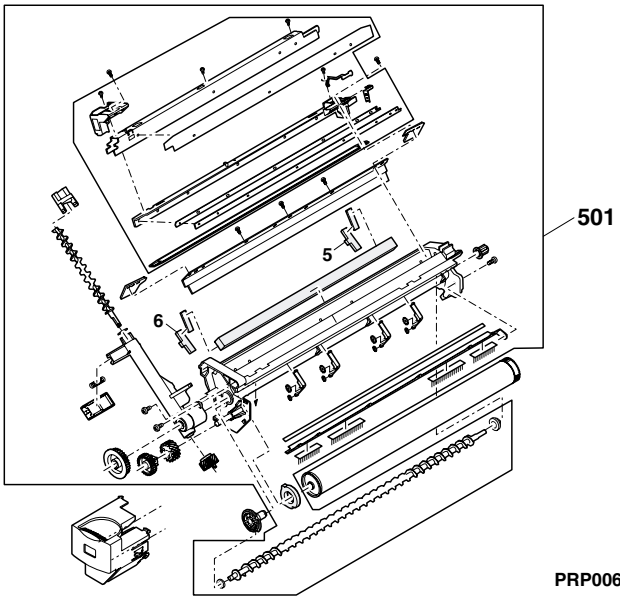

PRP00647

8 現像ｶｰﾄﾘｯｼﾞ ﾕﾆｯﾄ(DV cartridge unit)

NO.	PARTS CODE	PRICE RANK Ex.	PRICE RANK Ja.	NEW MARK	PART RANK	DESCRIPTION	
7	PSEL-0067QSZ3	AG	DX		C	TG seal LDAR	TG ｼｰﾙ LDAR
11	PCOVP0072QS12	AH	DX	N	C	DV cover	DVｶﾊﾞｰ
31	RDTCM0001YSZZ	AZ	FQ		B	ATC sensor	ATCｾﾝｻｰ
45	PSEL-0105QSZZ	AA	DJ		C	TN-SEL-FR	TN-SEL-FR
46	PSHEP0262QSZZ	AC	DJ		C	DV-UND-Sheet	DV-UNDｼｰﾄ
47	PSEL-0114QSZZ	AC	DJ		C	DV-MKT-F	DV-MKT-F
48	PSEL-0115QSZZ	AD	DJ		C	DV-MKT-F2	DV-MKT-F2
49	PSHEP0324QSZZ	AC	DJ		C	DVB-SHE-FBR (Except Japan)	DVB-SHE-FBR

8 現像ｶｰﾄﾘｯｼﾞ ﾕﾆｯﾄ(DV cartridge unit)

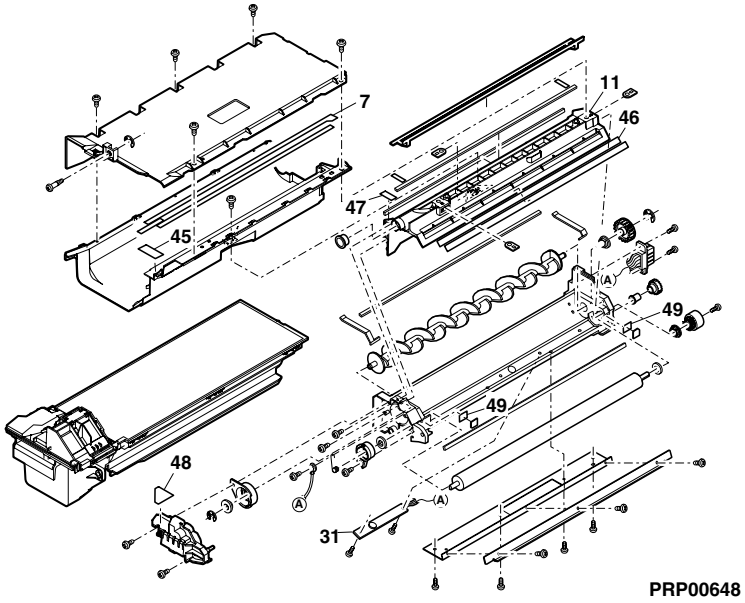

9 定着ﾕﾆｯﾄ(Fusing unit)

NO.	PARTS CODE	PRICE RANK Ex.	PRICE RANK Ja.	NEW MARK	PART RANK	DESCRIPTION	
5	PCOVP0029QSZ2	AT	EZ		C	Fusing cover	定着ｶﾊﾞｰ
32	MSPRT0089QSZ2	AC	DJ		C	Pressure spring B	加圧ﾊﾞﾈ B

9 定着ﾕﾆｯﾄ(Fusing unit)

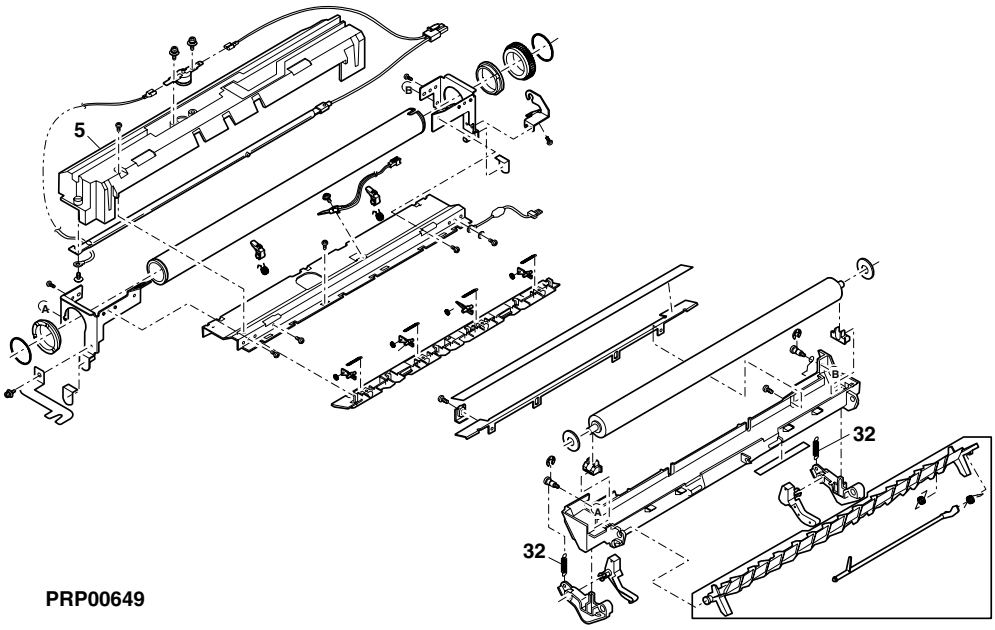

11 台板ﾕﾆｯﾄ1(Base plate unit 1)

NO.	PARTS CODE	PRICE RANK Ex.	PRICE RANK Ja.	NEW MARK	PART RANK	DESCRIPTION
2	DHAｉ−0091QSZ2	AE	DS		C	Tray SW harness ﾄﾚｲ検知SWﾊｰﾈｽ
9	CPWBF0023QSE1	AW	FG		E	Dry heater PWB (Japan) 除湿ﾋｰﾀｰ基板
56	GFTA−0005QSZZ	AC	DJ		C	2nd cover (Except Japan) 2nd蓋
57	XEBSD40P12000	AA	DD		C	Screw (4×12) (Except Japan) ﾋﾞｽ
58	PCLR−0010QSZZ	AC	DJ		C	Color ｶﾗｰPAN

12 台板ﾕﾆｯﾄ2(Base plate unit 2)

NO.	PARTS CODE	PRICE RANK Ex.	PRICE RANK Ja.	NEW MARK	PART RANK	DESCRIPTION
9	DUNTK0049RS18	BH	GX	N	E	AC switch unit (100V series) ACｽｲｯﾁﾕﾆｯﾄ
	DUNTK0049RS19	BH	GX	N	E	AC switch unit (200V series) ACｽｲｯﾁﾕﾆｯﾄ
⚠ 11	RDEN−0004QSZZ	BY	TF	N	E	Composite power supply unit (200V series) 複合電源ﾕﾆｯﾄ
⚠ 18	DHAｉ−0142QSZ1	AQ	EQ	N	B	AC cord (230V) (Lebanon,Iran,Nigeria,West Africa,Algeria, Egypt,Jordan,Syria,Tunisia,Morocco,STCL) ACｺｰﾄﾞ
⚠	DHAｉ−0143QSZ1	AS	EQ	N	B	AC cord (230V) (Soudi Arabia, Yemen,Oman,Qatar,Bahrain,Kuwait,UAE) ACｺｰﾄﾞ
	TCAUS0009QSZZ	AF	DS		C	LAG plug caushion lagel (LAG4) LAGﾌﾟﾗｸﾞｺｰｼｮﾝﾗﾍﾞﾙ
30	CPLTM0071QS02	AL	EB		C	Drive joint plate 駆動連結板
37	CPWBX0096QSF5	BZ	TR	N	E	MCU PWB (Japan) MCU基板
	CPWBX0096QSF6	CB	TX	N	E	MCU PWB (Except Japan) MCU基板
43	CPWBF0033QSE1	AP	EQ		E	RCU PWB ﾘﾓｰﾄｼｽﾃﾑ中継基板
45	DHAｉ−0123QSZ1	AU	EZ		C	PS low voltage harness PS低電圧ﾊｰﾈｽ
98	RCｉLZ0013QSZZ	BA	FX	N	B	Reactle (200V series) ﾘｱｸﾄﾙ
120	LPFTF0001QSZZ	AC	DJ		C	Pully flange ﾌﾟｰﾘｰﾌﾗﾝｼﾞ
121	DHAｉ−0261QSZZ	AF	DS	N	C	Reactle interface harness (200V Series) ﾘｱｸﾄﾙ中継ﾊｰﾈｽ
⚠ 501	DUNTK0050RS29	CC	UB	N	E	Power supply unit (100V) 電源ﾕﾆｯﾄ
⚠	DUNTK0050RS30	CC	UB	N	E	Power supply unit (120V) 電源ﾕﾆｯﾄ
⚠	DUNTK0050RS31	CC	UB	N	E	Power supply unit (230V) 電源ﾕﾆｯﾄ
⚠	DUNTK0050RS32	CC	UB	N	E	Power supply unit (127V) 電源ﾕﾆｯﾄ

11 台板ﾕﾆｯﾄ1(Base plate unit 1)

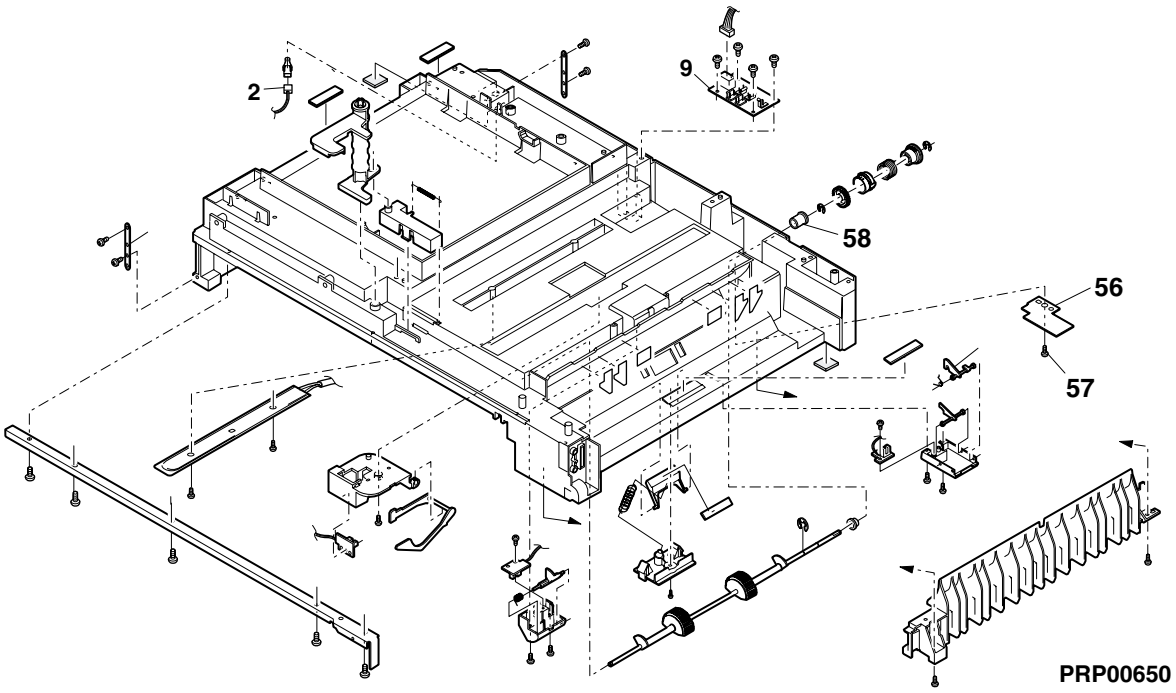

12 台板ﾕﾆｯﾄ2(Base plate unit 2)

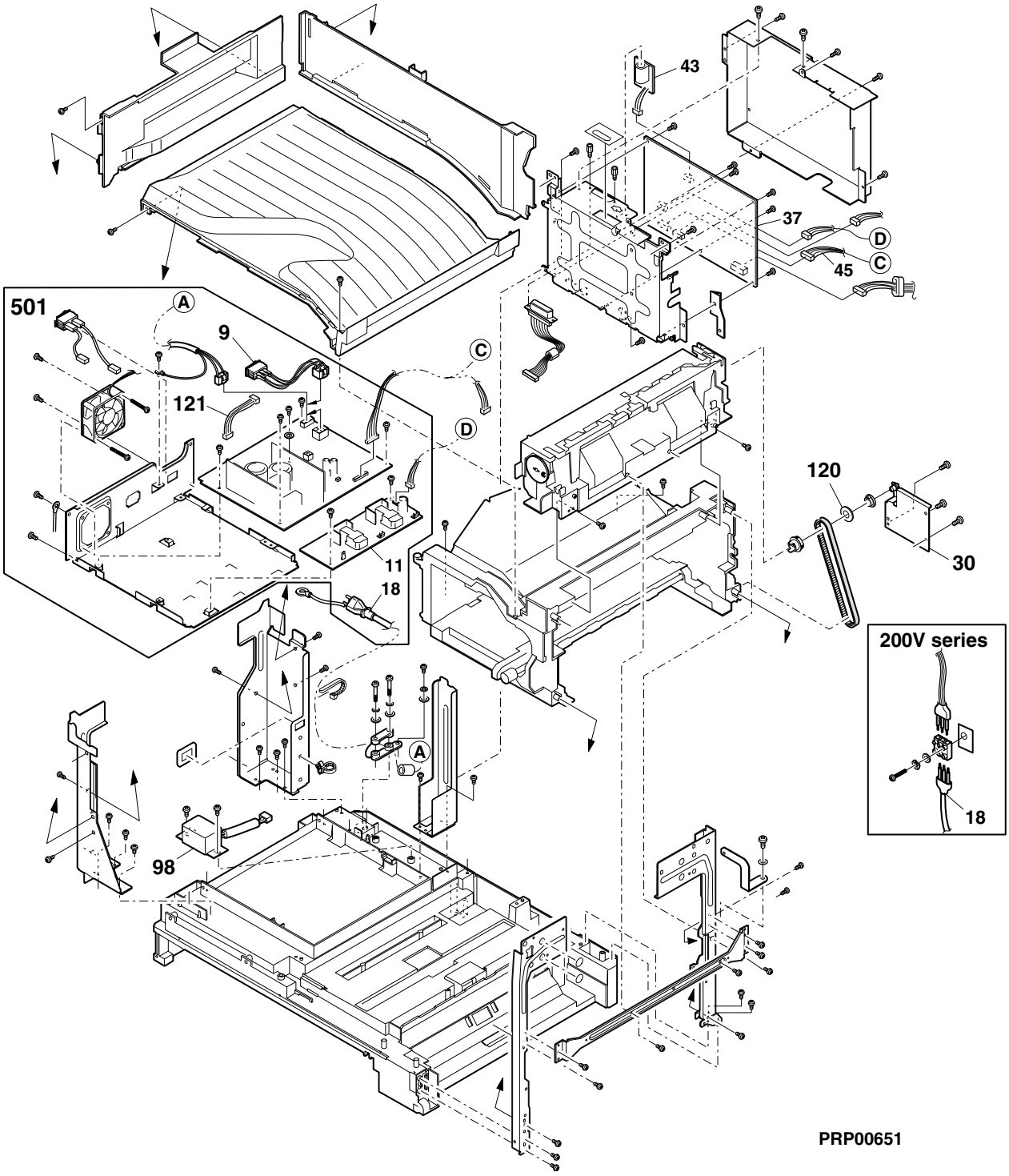

13 手差しﾏﾙﾁﾕﾆｯﾄ(Manual paper feeding multi unit)

NO.	PARTS CODE	PRICE RANK Ex.	PRICE RANK Ja.	NEW MARK	PART RANK	DESCRIPTION
3	LPLTP0056QSZ3	AD	DJ	N	C	Stopper plate ｽﾄｯﾊﾟｰ板
13	NRŌLR0922FCZZ	AR	EZ		C	Manual paper feed roller B9 手差しﾛｰﾗｰB9
502	CSŌU-0009QS31	BC	GJ		E	Manual feeding tray unit (Japan) 手差しﾄﾚｲﾕﾆｯﾄ
	CSŌU-0009QS32	AZ	FQ	N	E	Manual paper tray unit (Except Japan) 手差しﾄﾚｲﾕﾆｯﾄ

13 手差しﾏﾙﾁﾕﾆｯﾄ(Manual paper feeding multi unit)

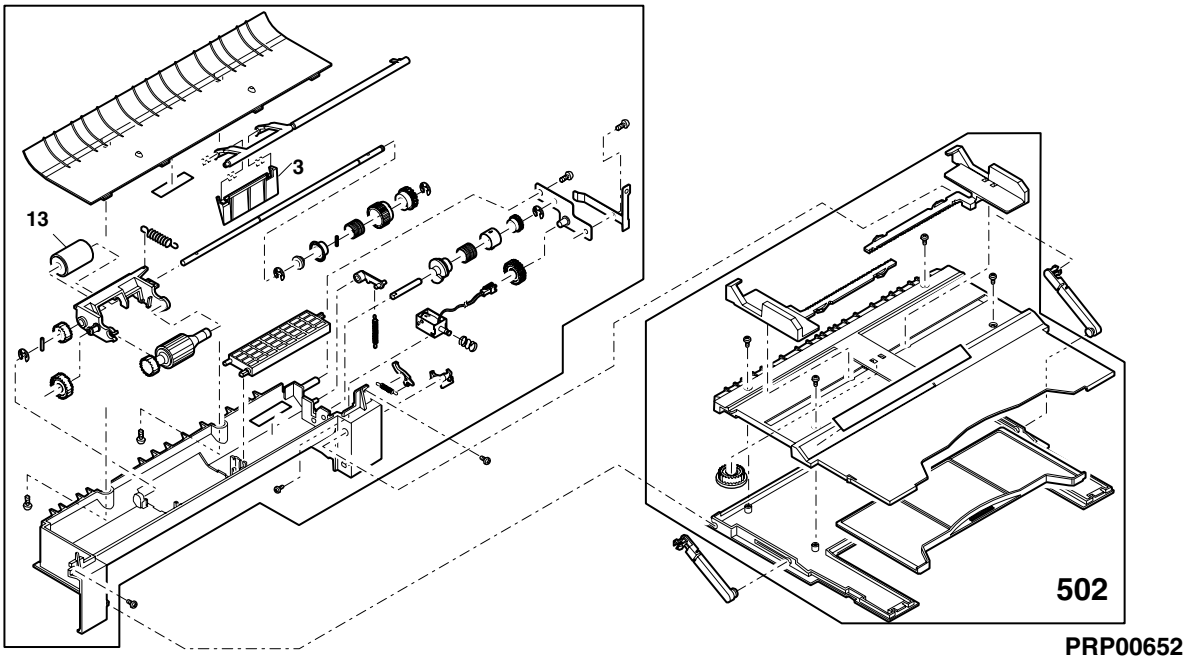

14 排紙ﾌﾚｰﾑﾕﾆｯﾄ(Delivery frame unit)

NO.	PARTS CODE	PRICE RANK Ex.	PRICE RANK Ja.	NEW MARK	PART RANK	DESCRIPTION
39	LFRM-0027QSZ1	AV	FG	N	C	Delivery frame 排紙ﾌﾚｰﾑ

14 排紙ﾌﾚｰﾑﾕﾆｯﾄ(Delivery frame unit)

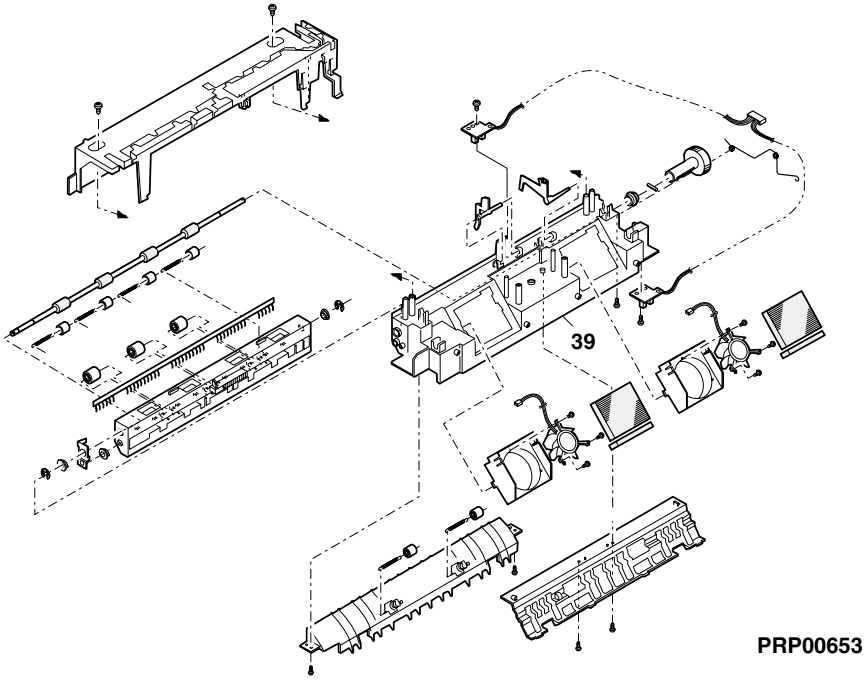

16 250枚ﾄﾚｲﾕﾆｯﾄ(250 sheets tray unit)

NO.	PARTS CODE	PRICE RANK Ex.	PRICE RANK Ja.	NEW MARK	PART RANK	DESCRIPTION
20	PSPAZ0022QSZZ	AC	DJ		C	Rotation plate S spacer 回転板Sｽﾍﾟｰｻｰ

16 250枚ﾄﾚｲﾕﾆｯﾄ(250 sheets tray unit)

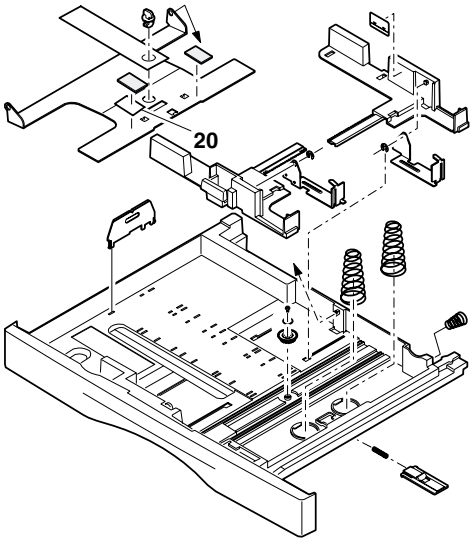

PRP00654

17 梱包材＆付属品(Packing material & Accessories)

NO.	PARTS CODE	PRICE RANK Ex.	PRICE RANK Ja.	NEW MARK	PART RANK	DESCRIPTION
1	SPAKC0395RSZZ	BP	LP	N	D	Packing case (Japan) ﾊﾟｯｷﾝｸﾞｹｰｽ
	SPAKC0396RS11	BR	LX	N	D	Packing case (SRS,SRSSC,STCL) ﾊﾟｯｷﾝｸﾞｹｰｽ
	SPAKC0396RSZZ	BR	LX	N	D	Packing case (Other countries) ﾊﾟｯｷﾝｸﾞｹｰｽ
4	SPAKA0083RSZZ	AD	DJ	N	D	Top packing cushion (Except Japan) 天ｱﾄﾞ
12	CCLEZ0005RS51	AQ	EQ		E	Charger cleaner unit ﾁｬｰｼﾞｬｰｸﾘｰﾅﾕﾆｯﾄ
17	SPAKA0150RSZZ	AA	DJ	N	D	Accessories protect packing cushion 付属保護材
20	TiNSJ0646QSZZ	AV	ZZ	N	D	Operation manual (COPY)(Japanese) 取扱説明書
	TiNSE0647QSZZ	AV	FG	N	D	Operation manual (COPY)(English) 取扱説明書
	TiNSE0653QSZZ	AV	FG	N	D	Operation manual (COPY)(English)(SRH) 取扱説明書
	TiNSF0648QSZZ	AU	FG	N	D	Operation manual (COPY)(French) 取扱説明書
	TiNSS0650QSZZ	AV	FG	N	D	Operation manual (COPY)(Spanish) 取扱説明書
	TiNSA0649QSZZ	AU	FG	N	D	Operation manual (COPY)(Arabic) 取扱説明書
24	TCADZ0164QSZZ	AG	DX	N	D	Inst. manual card (Japan) 設置手順書
101	SPAKA0133QSZZ	AG	DS		D	Spacer A (Japan) ｽﾍﾟｰｻｰA
102	SPAKA3914FCZZ	AC	DJ		D	DV sleeve (Japan) DVｽﾘｰﾌﾞ

17 梱包材＆付属品(Packing material & Accessories)

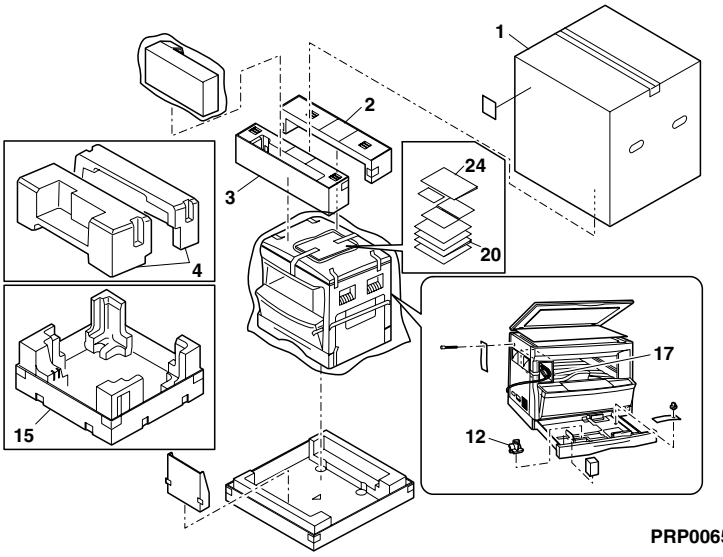

PRP00655

20 MCU基板(MCU PWB)

NO.	PARTS CODE	PRICE RANK Ex.	PRICE RANK Ja.	NEW MARK	PART RANK	DESCRIPTION
1	VHi29F04014QS	BB	GD	N	B	FLASH ROM (29F04013QS) (Japan)[IC20] ﾌﾗｯｼｭ ROM
	VHi29F04015QS	BB	GD	N	B	FLASH ROM (29F04015QS) (Except Japan)[IC20] ﾌﾗｯｼｭ ROM
18	QCNCW7191RC1B	AG	DX		C	Connector (12pin) [CN12] ｺﾈｸﾀｰ
40	QSŌCZ0002QSZZ	AD	DJ		C	IC socket (8pin) [IC4] ICｿｹｯﾄ
53	VCCUCY1AJ105Z	AC	DD		C	Capacitor (10WV 1μF) [C15,281] ｺﾝﾃﾞﾝｻｰ
60	VCEAGU1VW476M	AB	DD		C	Capacitor (35WV 47μF) [C72,75,76,96] ｺﾝﾃﾞﾝｻｰ
63	VCKYCY1HB102K	AA	DD		C	Capacitor (50WV 1000pF) [C4,5,18,21,23] ｺﾝﾃﾞﾝｻｰ
	VCKYCY1HB102K	AA	DD		C	Capacitor (50WV 1000pF) [C77~81,105~112] ｺﾝﾃﾞﾝｻｰ
	VCKYCY1HB102K	AA	DD		C	Capacitor (50WV 1000pF) [C115~130] ｺﾝﾃﾞﾝｻｰ
69	VHEUDZS5.6B-1	AC	DJ		B	Zener diode (UDZS5.6B) [ZD1~16,18,19] ﾂｪﾅｰﾀﾞｲｵｰﾄﾞ
73	VHiMC7805CT-1	AD	DJ		B	IC (MC7805CT-2) [IC15] IC
75	VHiNJM2103M-1	AH	DX		B	IC (NJM2103M) [IC2] IC
130	VHViCPN38//-1	AF	DS		B	IC (NJM2103M) [F1,2,3,6,7] IC
	ﾕﾆｯﾄ (Unit)					
901	CPWBX0096QSF5	BZ	TR	N	E	MCU PWB (Japan) MCU基板
	CPWBX0096QSF6	CB	TX	N	E	MCU PWB (Except Japan) MCU基板

33 ERDH操作基板(ERDH OP PWB)

NO.	PARTS CODE	PRICE RANK Ex.	PRICE RANK Ja.	NEW MARK	PART RANK	DESCRIPTION
3	QSW-P0008QSZZ	AC	DJ		B	Switch (EVQ-23G-04K) [K1,2,3] ｽｲｯﾁ
4	VHP1LHLE-002A	AC	DJ		B	LED (Red) (1LHLE-002A) [D1,2,3] LED
	ﾕﾆｯﾄ (Unit)					
901	CPWBF0025QSE3	AH	DX	N	E	ERDH operation PWB ERDH 操作基板

■ 索引(Index)

PARTS CODE	JAPAN ONLY ORDER CODE	NO.	PRICE R. Ex.	PRICE R. Ja.	NEW	P/R
【C】						
CCAB-0012QS0V	578 107 0415	1- 10	BA	FX	N	D
CCAB-0012QS0W	578 107 0416	1- 10	BA	FX	N	D
CCLEZ0005RS51	578 704 0029	17- 12	AQ	EQ		E
CCŌVH0010QS51	572 110 1105	1-501	BM	HV		E
CFRM-0021QS67	578 213 0368	7-501	BK	HG	N	E
CLNS-0003RS53	578 372 0015	5- 8	BR	LX		E
CMiR-0008QS32	578 374 0023	4-901	BB	GD		E
〃	578 374 0023	5- 2	BB	GD		E
CPLTM0071QS02	578 221 0646	12- 30	AL	EB		C
CPLTM0155QS02	578 221 0679	4- 13	AH	DX		C
CPLTM0156QS02	578 221 0680	4- 9	AH	DX		C
CPWBF0023QSE1	578 684 0788	11- 9	AW	FG		E
CPWBF0024QSE1	578 684 0890	2- 19	BL	HL	N	E
CPWBF0024QSE2	578 684 0891	2- 19	BL	HL	N	E
CPWBF0025QSE3	578 684 0880	2- 17	AH	DX	N	E
〃	578 684 0880	33-901	AH	DX	N	E
CPWBF0033QSE1	578 684 0792	12- 43	AP	EQ		E
CPWBX0096QSF5	578 684 0881	12- 37	BZ	TR	N	E
〃	578 684 0881	20-901	BZ	TR	N	E
CPWBX0096QSF6	578 684 0892	12- 37	CB	TX	N	E
〃	578 684 0892	20-901	CB	TX	N	E
CREFL0004QS33	578 432 0003	5-501	BL	HG		E
CSŌU-0009QS31	578 226 0126	13-502	BC	GJ		E
CSŌU-0009QS32	578 226 0176	13-502	AZ	FQ	N	E
【D】						
DHAi-0091QSZ2	578 542 0109	11- 2	AE	DS		C
DHAi-0123QSZ1	572 542 1587	12- 45	AU	EZ		C
DHAi-0142QSZ1	578 542 0239	12- 18	AQ	EQ	N	B
DHAi-0143QSZ1	578 542 0240	12- 18	AS	EQ	N	B
DHAi-0200QSZZ	578 542 0233	5- 81	AS	EZ		C
DHAi-0261QSZZ	578 542 0241	12-121	AF	DS	N	C
DUNTK0041RS14	578 685 0515	6- 7	BG	GX		E
DUNTK0049RS18	578 685 0540	12- 9	BH	GX	N	E
DUNTK0049RS19	578 685 0541	12- 9	BH	GX	N	E
DUNTK0050RS29	578 685 0542	12-501	CC	UB	N	E
DUNTK0050RS30	578 685 0543	12-501	CC	UB	N	E
DUNTK0050RS31	578 685 0544	12-501	CC	UB	N	E
DUNTK0050RS32	578 685 0545	12-501	CC	UB	N	E
【G】						
GCŌVH0010QSZ3	578 110 0184	1- 1	BC	GJ	N	D
GFTA-0001QSZ1	578 117 0030	1- 11	AT	EZ		D
GFTA-0005QSZZ	572 117 0094	11- 56	AC	DJ		C
【H】						
HPNLH0021QSZ1	578 158 0270	2- 3	AT	EZ	N	D
HPNLH0021QSZ2	578 158 0271	2- 3	AT	EZ	N	D
HPNLH0021QSZ3	578 158 0272	2- 3	AT	EZ	N	D
HPNLH0021QSZ4	578 158 0277	2- 3	AT	EZ	N	D
HPNLH0021QSZZ	578 158 0269	2- 3	AT	EZ	N	D
HPNLH0022QSZ1	578 158 0274	2- 4	AK	EB	N	D
HPNLH0022QSZZ	578 158 0273	2- 4	AK	EB	N	D
【J】						
JBTN-0018QSZZ	572 170 0446	2- 6	AE	DJ		C
JBTN-0026QSZZ	572 170 0459	2- 13	AE	DJ		C
JBTN-0027QSZZ	572 170 0460	2- 15	AD	DJ		C
JBTN-0029QSZZ	572 170 0449	2- 7	AE	DS		C
JBTN-0030QSZZ	572 170 0461	2- 14	AD	DJ		C
【L】						
LANGT0003QSZ1	578 200 0200	6- 51	AC	DJ		C
LFRM-0016QSZ2	578 213 0356	3- 10	AT	EZ		C
LFRM-0024QSZ3	578 213 0343	6- 46	BC	GJ		C
LFRM-0027QSZ1	578 213 0365	14- 39	AV	FG	N	C
LPFTF0001QSZZ	572 217 0088	12-120	AC	DJ		C
LPiNS0301FCZZ	572 218 0426	6- 47	AD	DJ		C
LPLTM4715FCZ1	572 221 5595	5- 96	AF	DS		C
LPLTP0056QSZ3	578 221 0705	13- 3	AD	DJ	N	C
【M】						
MSPRT0089QSZ2	578 258 0611	9- 32	AC	DJ		C
【N】						
NPLYZ0016QSZZ	578 284 0068	5- 18	AF	DS		C
NPLYZ0017QSZZ	578 284 0069	4- 4	AE	DS		C
NRŌLR0922FCZZ	572 287 1120	13- 13	AR	EZ		C
【P】						
PCLR-0010QSZZ	578 318 0039	11- 58	AC	DJ		C
PCŌVP0029QSZ2	578 323 0247	9- 5	AT	EZ		C
PCŌVP0072QS12	578 323 0252	8- 11	AH	DX	N	C
PSEL-0067QSZ3	578 400 0221	8- 7	AG	DX		C
PSEL-0105QSZZ	578 400 0235	8- 45	AA	DJ		C
PSEL-0114QSZZ	578 400 0233	8- 47	AC	DJ		C
PSEL-0115QSZZ	578 400 0234	8- 48	AD	DJ		C
PSEL-0129QSZZ	578 400 0239	7- 6	AF	DS	N	C
PSEL-0130QSZZ	578 400 0240	7- 5	AF	DS	N	C
PSHEP0262QSZZ	578 403 0644	8- 46	AC	DJ		C
PSHEP0324QSZZ	578 403 0713	8- 49	AC	DJ		C
PSHEZ0058QSZ1	578 403 0720	1- 2	AU	FG	N	D
PSPAZ0022QSZZ	578 413 0120	16- 20	AC	DJ		C
【Q】						
QCNCW7191RC1B	572 510 1027	20- 18	AG	DX		C
QSŌCZ0002QSZZ	578 527 0027	20- 40	AD	DJ		C
QSW-P0008QSZZ	572 530 0679	33- 3	AC	DJ		B
【R】						
RCiLZ0013QSZZ	578 614 0093	12- 98	BA	FX	N	B
RDEN-0004QSZZ	578 685 0537	12- 11	BY	TF	N	E
RDTCM0001YSZZ	572 618 0136	8- 31	AZ	FQ		B
【S】						
SPAKA0083RSZZ	578 902 0315	17- 4	AD	DJ	N	D
SPAKA0133QSZZ	572 902 1473	17-101	AG	DS		D
SPAKA0150RSZZ	578 902 0316	17- 17	AA	DJ	N	D
SPAKA3914FCZZ	572 902 0485	17-102	AC	DJ		D
SPAKC0395RSZZ	578 901 0559	17- 1	BP	LP	N	D
SPAKC0396RS11	578 901 0561	17- 1	BR	LX	N	D
SPAKC0396RSZZ	578 901 0560	17- 1	BR	LX	N	D
【T】						
TCADZ0164QSZZ	578 913 0197	17- 24	AG	DX	N	D
TCAUH0933FCZZ	572 914 0129	5- 97	AB	DD		C
TCAUS0009QSZZ	572 914 0679	12- 18	AF	DS		C
TiNSA0649QSZZ	578 916 0603	17- 20	AU	FG	N	D
TiNSE0647QSZZ	578 916 0604	17- 20	AV	FG	N	D
TiNSE0653QSZZ	578 916 0605	17- 20	AV	FG	N	D
TiNSF0648QSZZ	578 916 0606	17- 20	AU	FG	N	D
TiNSJ0646QSZZ	578 916 0595	17- 20	AV	ZZ	N	D
TiNSS0650QSZZ	578 916 0607	17- 20	AV	FG	N	D
TLABZ0058QSZZ	572 917 3341	1- 49	AD	DJ		C
【V】						
VCCUCY1AJ105Z	596 593 0899	20- 53	AC	DD		C
VCEAGU1VW476M	579 594 0046	20- 60	AB	DD		C
VCKYCY1HB102K	594 593 0044	20- 63	AA	DD		C
VHEUDZS5.6B-1	594 571 0179	20- 69	AC	DJ		B
VHi29F04014QS	578 573 1232	20- 1	BB	GD	N	B
VHi29F04015QS	578 573 1233	20- 1	BB	GD	N	B
VHiMC7805CT-1	572 573 0076	20- 73	AD	DJ		B
VHiNJM2103M-1	578 573 1129	20- 75	AH	DX		B
VHP1LHLE-002A	578 574 0043	33- 4	AC	DJ		B
VHViCPN38//-1	585 577 0022	20-130	AF	DS		B
【X】						
XEBSD30P06000	578 970 0102	5- 93	AA	DD		C
XEBSD40P12000	578 970 0084	11- 57	AA	DD		C
XEPSD30P08X00	595 970 0136	2- 46	AA	DD		C

SHARP

COPYRIGHT © 2001 BY SHARP CORPORATION

All rights reserved.
Printed in Japan.
No part of this publication may be reproduced,
stored in a retrieval system, or transmitted.
In any form or by any means,
electronic, mechanical, photocopying, recording, or otherwise,
without prior written permission of the publisher.

SHARP CORPORATION
Digital Document Systems Group
Quality & Reliability Control Center
Yamatokoriyama, Nara 639-1186, Japan

2001 June Printed in Japan ⓣ